SERIES TL 3342 SWITCHES

TACT SWITCHES SMT

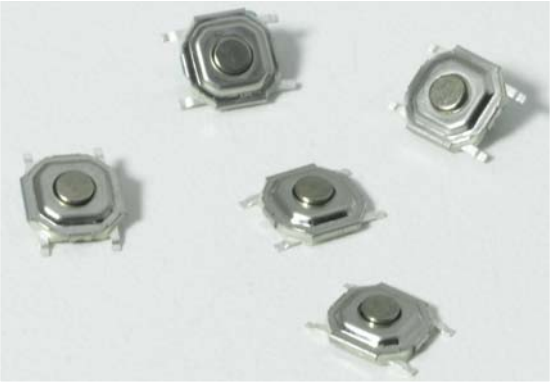

SPECIFICATIONS

Contact Rating:	50mA @ 12 VDC
Life Expectancy:	100,000 cycles typical
Contact Resistance:	20mΩ max. intial @ 2-4 VDC, 100mA
Insulation Resistance:	100MΩ
Dielectric Strength:	1,000 Vrms at sea level
Actuation Force:	160± 50 gf, 260± 50 gf
Operating Temperature:	-20°C to 70°C

MATERIALS

Housing:	Polyphenylene Sulfide (PPS) or 4/6 Nylon
Actuator:	Polyphenylene Sulfide (PPS) or 4/6 Nylon
Cover:	Tin plated steel
Contacts:	Silver-clad phosphor bronze
Terminals:	Silver-clad brass

FEATURES & BENEFITS

- Low profile design
- Positive tactile response

APPLICATIONS/MARKETS

- Telecommunications
- Consumer Electronics
- Audio/visual
- Medical
- Testing/instrumentation
- Computer/servers/peripherals

HOW TO ORDER

SERIES	MODEL NO.	ACTUATOR ("L" Dimension)	OPERATING FORCE	CONTACT MATERIAL	TERMINATION
TL	3342	(None) = Std.	F160 F260	Q = Silver	G = Gull Wing

Example Ordering Number

TL–3342–F160–Q–G

Specifications subject to change without notice 11.8.2018

TL 3342

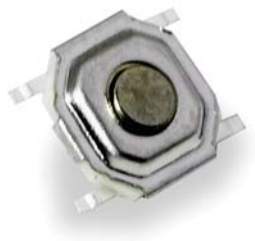

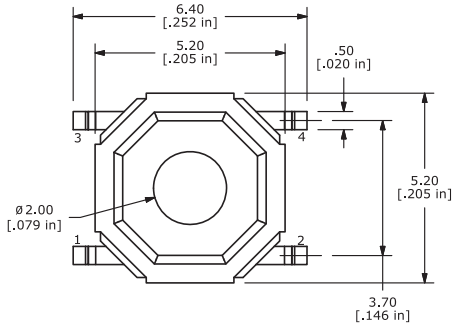

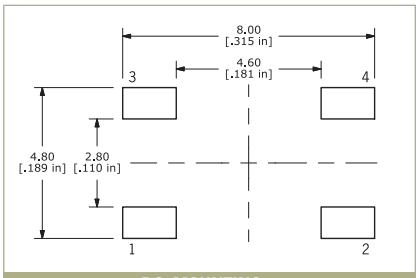

P.C. MOUNTING

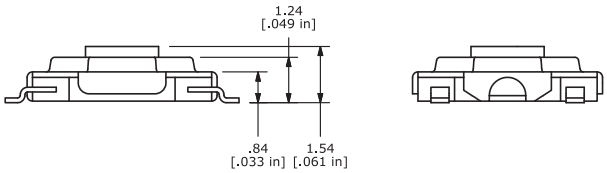

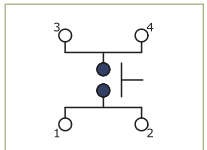

SCHEMATIC

E•SWITCH®
Phone: 800-867-2717
Fax: 763-531-8235